WEST BENGAL STATE ELECTRICITY DISTRIBUTION COMPANY LIMITED

Technical Specification for 3 – Phase 4 – Wire Static Whole Current Energy Meter of 1.0 Class Accuracy

1.0 SCOPE

(a) This specification covers design, engineering, manufacture, testing, inspection and supply of A.C. 3-phase, 4-wire solid state (Static) Whole Current lag only energy meter with backlit LCD display use for balanced / unbalanced load in urban / rural area. The meter should be capable of recording and displaying energy KWh & KVA, power factor range of Zero lag-unity-Zero lead. Meter should have facility /capability of recording tamper information & load survey in active, apparent & reactive energy & phase currents.

(b) It is not the intent to specify completely herein all the design and construction of meter however the meter shall conform in all respect to high standard of engineering, design and workmanship shall be capable of performing in continuous commercial operation in a manner acceptable to WBSEDCL, who will interpret the meanings of drawings and specification shall have the right to reject any work or material which in its judgment is not in accordance herewith. The offered meter shall be complete with all components, accessories necessary for their effective and trouble free operation of the system for the purpose mentioned above. Such components shall be deemed to be within the scope of bidders supply irrespective of whether those are specifically brought out in this specification and / or the commercial order or not.

(c) The original manufacturers of LT A.C. Static energy meters shall only quote against this tender. In case of foreign manufacturers their authorized agent may also bid provided that they should be registered vendor and shall have all the testing facilities in India. They should also produce the documents authorizing them as agents, in India.

It is mandatory that in case of all manufacturers, the offered meter shall be ISI marked and bidder shall have to furnish valid BIS certificate along with the offer. .

The metering system should be flexible enough for changing requirements in future and designed for minimum maintenance. The meters will be installed with fully wired weatherproof, thermosetting plastic / Polycarbonate pilfers proof Meter Box, as may be required.

2.0 STANDARDS APPLICABLE:

Unless specified elsewhere in this specification, the performance & testing of the meters should conform to the following Indian / International standards, to be read with upto-date and latest amendments / revisions thereof as on 90 days prior to floating of tender.

Sl.No.	Standard No.	Title
1.	IS 13779, 1999 read with its latest amendments.	A.C. Static Watt-hour Meters, Class 1.0 &2.0
2.	CBIP Technical Report 88(revised July,'96) & further amendment issued April' 99 to Sept'99.	Specification for AC Static Electrical Energy meters of CBIP with its latest amendments.
3.	IEC 687 - 1992	Alternating current static watt-hour meters for active energy (Class 1.0)
4.	CBIP Technical Report III	Specification for Common Meter Reading Instrument
5.	IS 13410 – 1992 with latest amendment	Specification for Pilfer Proof Meter box Suitable for 3 – Ph static Energy Meter

Meters matching with requirements of other national or international standards that ensure equal or better performance than the above mentioned standards should also be considered. When the equipment offered by the bidder conforms to standards other than those specified above, salient points of difference between standards adopted and the standards specified in this specification shall be clearly brought out in the relevant schedule. A copy of such standards along with their English translation shall invariably be furnished along with the offer.

3.0 CLIMATIC CONDITIONS :

The meters to be supplied against this specification should be suitable for satisfactory continuous operation under the following tropical conditions. Meters should be capable of maintaining required under hot, tropical and dusty climatic conditions.

i)	Maximum Ambient Air Temperature in shade	: $55^{o}C$
ii)	Minimum Ambient Air Temperature	: (-) $10^{o}C$
iii)	Maximum Relative Humidity	: 95% (Non-condensing)
iv)	Minimum Relative Humidity	: 10%
v)	Height above mean sea level	: Upto 3000 meters
vi)	Average number of tropical monsoon per Annum	: 5 months
vii)	Annual Rainfall	: 100 mm to 1500 mm
viii)	Max. Wind Pressure	: 150 Kg/ sq.m.

4.0 TROPICAL TREATMENT :

The meters shall be suitably designed and treated for normal life and satisfactory operation under hot & hazardous tropical climate conditions and shall be dust and vermin proof. All the parts & surface, which are subject to corrosion, shall either be made of such material or shall be provided with such protective finish which provides suitable protection to them from any injurious effect of excessive humidity.

5.0 BRIEF ELECTRICAL SPECIFICATION:

Class of accuracy	: 1.0 (No drift in tolerance of accuracy with time) **(Meter should record energy at 1% Ib at UPF Preferably with an error band ± 2% in balanced load)**
Supply Voltage	: 3 x 240V, (– 30% to + 20%) (For Phase to Neutral Voltage variation)
Frequency	: 50 Hz ± 5%
Basic Current Range (Ib)	: 5A for (5 – 30A),& 20A for (20 – 100A)
Maximum continuous Current (Imax)	: 30A for (5 – 30) A & 100A for (20 – 100) A
Starting Current	: 0.2% of Ib at UPF
Power factor range	: Zero (lagging) – Unity – Zero (Leading)
Power Loss	: Voltage Circuit Less than 1.5W / 10VA Current Circuit Less than 4VA (Meter with less VA burden in Voltage Circuit Will get preference)
Resistance to surge voltage	: Minimum 8KV peak of 1.2/50 Micro sec.
Test Voltage at 50 Hz for 1min:	: 4 KV rms – as per IS 13779
Clock time accuracy	: ± 3 min/year.

6.0 MAXIMUM CONTINUOUS CURRENT :

The maximum continuous current in meters should be the current at which the meter purports to meet the accuracy requirement of the specification. The same is indicated in Clause5.0 above.

7.0 CONSTRUCTION :

The case, winding, voltage circuit, sealing arrangements, registers, terminal block, terminal cover & name plate etc. shall be in accordance with the relevant standards. The meter should be compact & reliable in design, easy to transport & immune to vibration & shock involved in the transportation & handling. The construction of the meter should ensure consistence performance under all conditions especially during heavy rains / very hot weathers. The insulating materials used in the meter should be non-hygroscopic, non-ageing & have tested quality. The meter should be sealed in such a way that the internal parts of the meter becomes inaccessible and attempts to open the meter shall result in viable damage to the meter cover. **This is to be achieved by using continuous Ultrasonic welding on the Meter body or any other technology which is either equally or more efficacious.**

The meter should comply latest technology such as Microcircuit or Application Specific Integrated Circuit (ASIC) to ensure reliable performance. The mounting of the components on the PCB should compulsorily be Surface Mounted Technology (SMT) type. Power supply component may be of PTH type. The electronic components used in the meter should be of high quality and there should be no drift in the accuracy of the meter for at least ten years. The circuitry of the meter should be compatible with 16 Bit (or better) ASIC with compatible processor and meter should be based on Digital measuring and sampling technique.

The meter should be housed in a safe, high grade, unbreakable, fire resistant, UV stabilized, virgin Polycarbonate casing of projection mounting type. The meter cover should be transparent, for easy reading of displayed parameters, and observation of operation indicators. The meter base may not be transparent, but it should not be black in colour. The meter casing should not change shape colour, size and dimensions when subjected to 200 hrs on UV test as per ASTMD 53. It should withstand 650°C glow wire test and heat deflection test as per ISO 75.

In addition to the above, the meter cover should be sealed with the meter base by 2(Two) bar-coded seals bearing the identification marks of the manufacturer.

At least two fixing screws for fixing meter cover with the meter base shall be provided. Each screw should have two holes one for fitting/fixing of manufacturer's seal and the other for the utility seal. The arrangement should be in such a manner that any access to the working part of the meter body will not be possible without breaking / tampering / removing the said seals. Suitable arrangement should be made for fitting/fixing of utility seal at two sides of meter terminal cover in such a manner that any access to the terminal cannot be possible without removing the seals. There should also be provision for sealing at the optical port.

The bidder shall submit relevant documents regarding the procurement of polycarbonate material. The polycarbonate material of only the following manufacturers shall be used.

a) G.E. Plastics (Sabic)	**LEXAN 943A / 143 or equivalent for cover & Terminal cover / LEXAN 503R or equivalent base.**
b) BAYER	**Grade corresponding to above**
c) DOW Chemicals	**-Do-**
d) MITSUBISHI	**-Do-**
e) TEJIN	**-Do-**
f) DUPONT	**-Do-**

8.0 METER CASE AND COVER :

The meter should have a case, which can be sealed in such a way that the internal parts of the meter are accessible only after breaking the seal and cover. This is to be achieved by use of **Ultrasonic Welding** (Ultrasonically continuously welded at three sides so that the cover cannot be separated from the basic without breaking/damaging the case & cover) or any other technology which is either equally or more efficacious. In case, ultrasonic welding using plate / strip is used the material of plate / strip should be same as that of cover and base and the strip. The manufacturer's logo should be embossed on the strip / plate. The material of the meter body (case and cover) shall be of Engineering Plastic.

The meter cover should be fixed to the meter base (case) with Unidirectional Screws, so that the same cannot be opened by use of screwdrivers. These unidirectional screws should be covered with transparent caps, ultrasonically welded with the meter body and the screw covers should be embedded in the meter body in a groove.
The meter shall withstand external magnetic influence as per latest amendments of CBIP Technical Report No.304.Meter should record energy at Imax UPF with stamping if not immune

9.0 TERMINAL BLOCK AND COVER :

The terminals may be grouped in a terminal block having adequate insulating properties and mechanical strength. The terminal block should be made from best quality non-hygroscopic, flame retardant material (capable of passing the flammability tests) with nickel plated brass inserts / alloy inserts for connecting terminals.

The terminals in the terminal block shall be of adequate length in order to have proper grip of conductor with the help of screw adjustable metal plates to increase the surface of contact and reduce the contact resistance. The screws shall have thread size not less than M4 and head having 4-6mm. Diameters. **The screws shall not have pointed ends at the end of threads.** All terminals and connecting screws and washers should be of tinned / nickel plated brass material. The terminal Block & Cover should withstand glow wire test at 960 ± 15 ºC and the terminal should withstand at least 135 ºC as per IS.

The internal diameter of terminal hole should be minimum 9.5 mm and center to center distance is 13 mm. The holes in the insulating material shall be of sufficient size to accommodate the insulation of conductor also.

The terminal cover shall be transparent re-inforced Polycarbonate, Engineering Plastic with minimum thickness 2.0 mm and the terminal cover shall be of extended type completely covering the terminal block and fixing holes. The space inside the terminal cover should be sufficient to accommodate adequate length of external cables.

10.0 MARKING OF THE METER :

The marking on the meter should be in accordance with relevant clauses of IS 13779.

The basic marking on the meter nameplate should be as follows (all other markings as per IS shall also be there):

a) Manufacturer's name & trade mark
~~a)~~b) Type Designation
~~a)~~c) No of phases & wires
~~a)~~d) Serial Number (Size not less than 5 mm)
~~a)~~e) Year of manufacture

Formatted: Bullets and Numbering

~~a)~~f) Reference Voltage
~~a)~~g) Rated Current
~~a)~~h) Operating Frequency
i) Principal unit(s) of measurement
j) Meter Constant (imp / Kwh)
k) Class index of meter
l) Property of WBSEDCL
m) Purchase Order No. & Date
n) Guarantee (Guaranteed for a period of 5 ½ Yrs. From date of delivery)
o) BIS marking
p) Place of manufacture
q) Meter Sl. No. in alpha numerical form, Dt. of Manufacture, Rating of the meter and P.O. reference should be bar coded.

11.0 DISPLAY OF MEASURED VALUES :

The meter shall have Alphanumeric display with at least 7 full digit with LCD backlit display, having minimum character height of 10 mm. The data should be stored in non-volatile memory. The non-volatile memory should retain data for a period of not less than 10 years under unpowered condition. Battery back-up memory will not be considered as NVM.

It should be possible to easily identify the single or multiple displayed parameters through symbols / legend on the meter display itself or through display annunciator.

The register shall be able to record and display starting from zero, for a minimum of 2500 hours. The energy corresponding to rated maximum current at reference voltage and unity power factor. The register should not roll over in between this duration.

In addition to provide Serial Number of the meter on the display plate, the meter serial should also be programmed into meter memory for identification through communication port for CMRI / laptop / meter reading printout.

Visibility of display in poor light conditions is an important criterion. STN or TN type of LCD to be used. Proper annunciation for the displayed parameters to be provided (Factory programmable).

The meters should have auto-display mode for pre-selected parameters. Push-Button mode of display should display all parameters and it should have priority over auto mode. The meter should give clear message on display to indicate that the meter has experienced tampers and the nature of tamper with first occurrence and last restoration date & time.

The meter shall have a test output **(**blinking **LED)** accessible from the front and be capable of being monitored with suitable testing equipment. The operation indicator must be visible from the front. Test output device should be provided in the form of one common LED for active, reactive and apparent energies with the provision of selecting the parameter being tested (separate LED may also be used with proper separation).

Meters should have calibrating LED pulse output for Energy Vectors.
The meter should also record values of Energies at present date & time and last 12 months.(Factory Programmable).

12.0 DISPLAY SEQUENCE :

The meter should display the required parameters in two different modes as follows:
Display sequence for both Auto and Push button must be maintain, any interchange between the display parameter is not accepted.

A) Auto Display Mode:

The following parameters should be displayed in auto cycle mode, in the following sequence.

- LED / LCD test
- Meter serial number
- Rising Apparent Demand with elapsed time
- Real Time & Date (dd mm yy)
- Power On Hours (Month wise)
- Active Energy
- Maximum Demand in KW.(Previous Month)
- Maximum Demand in KW.(Present Month)
- Reactive Energy (Lag only)
- TOD Active Energies

Each parameter should be on meter display for 9 to 12 seconds and the time between two auto cycles should be 90 to 120 seconds gap.

B) Push Button mode :

In addition to the auto display mode parameters, the following parameters should be displayed on pressing the push button (all display of auto mode and the following).

- Average Power Factor (Monthly)
- Instant Power Factor
- Avg. Load factor (Previous Month)
- Avg. Load Factor (Present Month)
- Apparent Energy
- Apparent Max Demand (Lag only, Previous Month)
- Apparent Max Demand (Lag only, Present Month)
- TOD Apparent Demand
- MD reset count
- Inst. Phase Voltage
- Inst. Phase Currents
- Inst. Load (Active & Apparent)
- Tamper Information
- Total Tamper count
- Previous 3 months (at least) cumulative Kwh, Kvah and Maximum Demand in KW & KVA at 24.00 hrs. of last date of the month.
- Cumulative Power failure in days – hrs. from the date of manufacturing.

Any other useful display will be acceptable like;

- Neutral Current at any instant

13.0 ANTI TAMPER FEATURES :

The meter should have the following anti-tamper features:

i) The meter shall be capable of recording energy correctly even if the input and output terminals are interchanged.

ii) The meter shall work correctly irrespective of phase sequence of supply.

iii) The meter shall work correctly even in absence of neutral (Upto 20% voltage variation Accuracy must be within ± 4%)

iv) The meter shall work correctly if one, two and all three phase current direction is reversed.

v) Meter should record energy with maximum error of ± 4% on injection of DC in neutral, injection of pulsating DC (7-10Hz) in neutral. DC voltage rectified from a three phase power supply will be applied for continuous DC injection.

vi) Meter should record energy with maximum error of ± 4% on injection of chopped AC in Neutral. However meters which are immune or maintain better accuracy, will be preferred. Maximum chopping for AC injection will be 25% to 30% (60 V to 300V) at peak end.

vii) The meter should be immune to Electro Static Discharge or Sparks of 35 KV (approx) induced by using frequency-generating devices having very high output voltage. Tests in this respect will be conducted by using commonly available devices and during spark discharge test, spark will be applied directly at all vulnerable points i.e. at Push Button, Optical Port, Terminal Cover ends, Junction Points between Base and Cover &Terminal Points of the meter for a period of 10 minutes (0-10 mm spark gap) and meter should record under this condition. After application of spark discharge meter should record correctly within the specified limits of errors. **Beyond 35 KV meter should record as tamper if not immune.**

Circuit diagrams for test jig for chopped A.C. & pulsating D.C. injection are enclosed.
The meter shall be capable of recording; occurrences and restoration with date and time the following tamper conditions:

- Missing Potential for all phases.
- Voltage unbalance (If Vmax – Vmin is greater than 30 % of Vref)
- Current reversal for all phases.
- All potential missing or Power failure.
- Magnetic Disturbances (IS 13779 & CBIP 304)
- C.T. Open
- C.T. Bypass / C.T. Short

Snapshot values of Phase Voltage, Phase Current & Phase wise Power Factor, Active Energy value during occurrence & restoration to be provided in the above mentioned for all tamper conditions in BCS.

The duration of tamper before it is logged should be a user programmable (factory) through authenticated commands. (But it should not be more than 10 min.)

All authenticated commands should be Base Computer Software controlled.
All transactions with meter should be date & time logged.

Properly designed meter tamper logic should be provided and clearly explained in the bid. The tamper logic should be capable of discriminating the system abnormalities from source side and load side and it should not log/record tamper due to source side abnormalities.

A minimum of 300 events (one event means either occurrence or restoration) of all types of tamper with date & time stamping should be available in meter memory. The logging will be on FIFO basis.

Meter should have an indication in its display if top cover is removed / open, and it must be logged in BCS also.

13.1 Measurement of Harmonics:

The meter should be capable of measuring fundamental energy as well total energy i.e., fundamental plus Harmonics energy. Total energy shall be made available on meter display and the same only shall be used for billing purpose. Provision for measuring of fundamental energy should be kept for utilization in future.

The total energy & fundamental energy shall be logged in the meter memory and be capable of downloading to the BCS through the CMRI and be available for viewing at the BCS end.

14.0 RESETTING OF MAX. DEMAND :

The meter should be capable of recording the Apparent MD with integration period of 15 minutes (programmable). The meter should also record MD at preset date and time.
MD reset should be through all of the three means: 1) Manually 2) Through authenticated MRI and Remote Communication Command, 3) Automatic resetting at preset date & time.
Facility to invoke any of the above through authenticated MRI command should be provided.
By default the M.D. reset will be through push button on any date of the month.
MD reset button should have proper sealing arrangement.
Push button for scrolling display & MD reset should be separate.

15.0 LOAD SURVEY :

The meter should be capable of recording load survey for the following parameters for a period of minimum 45 days with 15 minutes integration period.

i) Demand in KW,
ii) Demand in KVA
iii) Current – phase-wise
iv) Voltage - Average Voltage

The NVM shall not require any additional battery backup to retain the data in case of power failure, for upto 10 years and the data storage shall be independent of battery backup unit.
The life of the RTC battery in circuit condition should be minimum 5 years in case of power failure.
It should be possible to transfer this data to base computer software through MRI. The data so obtained should be displayed in both graphical & numeric form in the BCS. The BCS with all details is to be provided by the supplier at no extra cost.

16.0 TIME OF DAY FACILITIES :

The meter should have facilities to record Active, Apparent Energies and MD in at least 8 zones. The time zones should be user programmable through **authenticated MRI** command. Necessary software for the same, to be provided by the bidder.

At present TOD timings will be programmable as follows:

TOD – 1	06:00 Hrs to 17:00 Hrs,
TOD – 2	17:00 Hrs to 23:00 Hrs,
TOD – 3	23:00 Hrs to 06:00 Hrs of next day.

17.0 METER READING DURING POWER OFF :

It should be possible to read the meter-display visually and with MRI in absence of input voltages with the help of internal or external battery backup. The interface preferred will be inductive coupling. If otherwise, proper sealing arrangement of coupling port to be provided. In case of internal battery the arrangements should be such that hands free operation is possible. Separate battery should be used for this purpose (Not RTC or processor battery).

18.0 SELF DIAGNOSTIC FEATURES :

The meter shall be capable of performing complete self-diagnostic check to monitor the circuits for any malfunctioning to ensure integrity of data memory location all the time.
If possible, the details of malfunctioning should be recorded in the meter memory.
The bidder should furnish the details of self-diagnostic capability feature.

19.0 IMMUNITY TO ELECTRO MAGNETIC DISTURBANCE:

The meter should be designed in such a way so that external electromagnetic field or electrostatic discharges do not influence the performance of the meter.

20.0 TECHNICAL SUPPORT, MANUALS & TRAINING :

Extensive technical support, detailed technical literature & training is to be provided by the manufacturer. Supply of External Battery Packs to be provided by the manufacturer and should be clearly offered in their bids.

21.0 INFLUENCE QUANTITIES :

The meter shall work satisfactory with guaranteed accuracy as per limit as per limit or relevant IS under presence of the following quantities:

i) Electromagnetic field
ii) External magnetic field
iii) Radio frequency interference
iv) Vibration
v) Voltage fluctuation
vi) 35KV Electrostatic field
vii) Harmonics Distortion as relevant IS and IEC.

22.0 POWER CONSUMPTION BY METER :

Voltage Circuit: The active and apparent power consumption in the voltage circuit including the power supply of meter at reference voltage, Reference temperature and reference frequency should not exceed 1.5 Watt and 10 VA respectively (including all phases).

Current Circuit: The apparent power taken by each current circuit at basic current, reference frequency and reference temperature should not exceed 4 VA (including all phases).

23.0 STARTING CURRENT :

The meter should start registering energy at 0.2 % of basic current at unity power factor and should be fully functional within five seconds after the rated voltage is applied.

23.1 RUNNING AT NO LOAQD:

When 70% & 120% voltage is applied and no current flows in the current circuit, the test output of the meter should not produce more than one pulse.

24.0 COMMUNICATION CAPABILITY :

The meter shall have a galvanically isolated optical communication port so that it can be easily connected to a hand-held common meter reading instrument (CMRI) for data transfer. The billing data & the tamper data downloading time should be less than 2 minutes. The optical port should be provided with proper sealing arrangement so that the optical cover should not be opened without breaking the seal. The stored data in the meter should be available through CMRI even when the display of the meter is not available.

The above ports suitable for interface of the meter with appropriate protocol to Common Meter Reading Instrument (CMRI) / LAPTOP / PC.

A separate suitable serial port capable of being hooked into a remote metering device such as modem, etc. should be provided to enable future Automatic meter reading.

It should not be possible to alter date in the meter by-passing commands from the CMRI or Laptop. For alteration of RTC time, change of TOD timing, Billing parameters, etc. it should be possible to perform this functions through CMRI but only through authenticated commands sets by BCS after scheduling for particular meter sl.nos. No alteration, change should be possible through authenticated commands sets by the BCS without scheduling the meters. Moreover, no alternation change should be possible using CMRI only, i.e. the control has to be with the BCS.
The BCS shall have multi-level password for data protection & security.

100 nos Meter to CMRI communication cord, 60 nos BCS & 40 nos seal tracking software should be supplied to the office of the C.E. (DTD) for distributions at sites.

Seal tracking software should be submitted and installed at PC/ Laptop of the purchaser before commencement of supply of the meters i.e it must be supplied before/at the time of offering first lot inspection.

25.0 BASE COMPUTER SYSTEM & SOFTWARE REQUIREMENTS :

The Common Meter reading Instrument (CMRI/Laptop) should be capable of being loaded with user-friendly software (MS-DOS 5.0 or higher version compatible) for reading / downloading meter data. Windows based Base Computer Software (BCS) should be provided for receiving data from CMRI / Laptop and downloading instructions from base computer software to CMRI / Laptop.
The BCS should be WIN Xp, WIN 2000 pro based and copy righted.
The data stored in the meters memory including defrauded energy should be available on the BCS.
This BCS should have, amongst other requirements, features and facilities described later in this specification, the facility to convert meter-reading data into user definable ASCII file

format so that it may be possible for the user to integrate the same with the user's billing data and process the selected data in desired manner. All the data available in the meter including energy, MD, and history data should be convertible to user defined ASCII file format for integration with third party software. The vendor should supply necessary base computer software for reading / viewing of meter data and converting to user defined ASCII files formats. The user should have the flexibility to select the parameters to be converted into ASCII file. The vendor should also supply the necessary CMRI / Laptop software (during sample testing also).

The bidder has to supply the Meter Reading protocol (API), free of cost. The protocol should not be complicated & should be easily understandable to introduced compatibility between meters, BCS and CMRI of other makes. The bidder shall indicate the relevant standard to which the protocol complies. The compatibility of transferring data from the meter to CMRI & then to the BCS should be easily established. Any change or upgradation of CMRI software of CMRI software or BCS in future, required for any reason, has to be done by the supplier at his own cost.

The software should be capable of preparing CMRI to read the meter information or to reconfigure the meter for change of TOD timings and / or time setting of the meter.

The exhaustive on-line help should be available with the software so that user can use all the features of the software by just reading the help contents.

In BCS 12 months back-up data for KWh, KVAh, MD in KW & KVA (total & TOD wise), Average Load Factor, Average Power Factor must be available.

26.0 ACCURACY:

There shall be no drift in accuracy, for a period of ten years from the date of supply. In case any drift is noticed which is beyond the permissible limits, the bidder shall re-calibrate / replace by a new meter without any extra cost.

General Requirements:-

1. GUARANTEED TECHNICAL PARTICULARS :

The bidder shall furnish all the necessary information as desired in the Schedule of Guaranteed Technical Particulars and data, appended with this Specification. If the bidder desire to furnish any other information in addition to the details as asked for, the same may be furnished against the last item of this Annexure. – I

2. TECHNICAL DEVIATIONS :

Any deviation in Technical Specification as specified in the Specification shall be specifically and clearly indicated in the Schedule of deviation format.

3. 0 TESTS :

3. 1 Type Testing of Meter

The offered meters should be type tested at any NABL accredited laboratory in accordance with IS 13779 with latest amendments, CBIP Report 304 with latest amendments. The type test report should not be more than 3 (Three) years old. A copy of the Type Test results should be enclosed with the offer. If there is any modification in the design / parameters of the specifications or use of constituent materials in the offered meters submitted with the offer, from the meter which was submitted type

tested, which may affect the characteristics as well as parameters of the meter, revised type test certificates as per the design, parameters and constituent material used in the offered meter, shall have to be submitted failing which the offer may be liable to be rejected.

Type Test Certificate from any NABL accredited Lab. Shall only be consider.

Type test certificate should contain the following information clearly:

1) **Type of display i.e. whether counter is mechanical type or LCD.**
2) **Class of accuracy.**
3) **Meter constant.**

3. 2 Acceptance tests :

A) The acceptance tests as stipulated in CBIP / IS (with latest amendments) shall be carried out by the supplier in presence of WBSEDCL's representative.

B) Also the following additional tests are to be carried out on one meter randomly selected from each lot offered for inspection / acceptance testing.

i) Magnetic induction of external origin (AC & DC)
ii) Tamper & Fraud protection, as per Clause of 13 of this specification.
iii) Test of endurance upto 150% of Imax (5 – 30)A, 120% of Imax (20 – 100)A for two hours, followed by verification of Limits of error.
iv) Verification of internal components.
v) Dry Heat Test as per IS 13779 / 99, Clause 12.6.1, of one meter from the offered Lot is to be arranged by the supplier at any NABL accredited laboratory, at his cost.
In case of failure of Meters as specified in Annexure – H of IS-13779 (For A above) the entire lot will be treated as rejected.
In case of failure of any single meter (as per B above) the entire lot will be rejected.

3. 3 Routine Tests :

Each and every meter of the offered lot shall undergo the routine tests as well as functional tests as per IS: 13779/1999, CBIP Report 304 and after sealing the meters, the manufacturers will have to submit the routine test report of all the meters as well as a statement showing Sl. Nos. of the seals used for both sides of each of the meters against each meter Sl. No. of offered lot in soft copy (MS WORD or EXCEL format) to (a) The Chief Engineer & M.C(CS&PD) (b) The Chief Engineer(DTD) along with offer letter for acceptance test.

4.0 TEST FACILITIES :

The tests for equipment / instrument shall be carried out as per relevant Standards and test certificates shall be furnished for scrutiny. The Bidder shall indicate the details of the equipment available with him for carrying out the various tests as per relevant Standards. The bidder shall indicate the sources of all equipments / instruments.

NOTE : The standard meters used for conducting tests shall be calibrated periodically at any NABL Accredited Test Laboratories and test certificates shall be available at Works for verification by purchasers representative.

The manufacturer shall have at least the following testing facilities to ensure accurate calibration:-

- AC high voltage test
- Insulation test
- Test of no load condition
- Test of Starting condition
- Test on Limits of error
- Power loss in voltage and current circuit
- Test of Repeatability of error
- Test of meter constant
- Test of magnetic influence

5.0 INSPECTION :

The WBSEDCL may carry out the inspection at any stage of manufacture. The manufacturer shall grant free access to the purchaser's representative at a reasonable time when the work is in progress. Inspection and acceptance of any equipment under this specification by the purchaser shall not relieve the supplier of his obligation of furnishing the equipment in accordance with the specification and shall not prevent subsequent rejection if the equipment is found to be defective.

All acceptance tests and inspection shall be made at the place of manufacturer unless otherwise especially agreed upon by the Bidder and WBSEDCL at the time of purchase. The Bidder shall provide all reasonable facilities without charge to the inspector, to satisfy him that the equipment is being furnished in accordance with this specification.

The supplier shall keep the WBSEDCL informed in advance, about the manufacturing programme for each lot so that arrangement can be made for inspection.

The WBSEDCL reserves the right to insist for witnessing the acceptance / routine testing of the bought out items. The supplier shall give 15 days for local supply / 30 days in case of foreign supply advance intimation to enable the purchaser to depute his representative for witnessing the acceptance and routine tests.

The WBSEDCL reserves the right for type test of any meter as well as the meter casing from any of the offered lots from CPRI or any other NABL accredited laboratory.

6.0 SUBMISSION OF SAMPLE METER

Tender paper will be submitted to the office of the Material Controller, Central Store & Purchase Department, WBSEDCL, Bidyut Bhavan (4th floor), Block-B, Salt Lake, Kol-91, on any working day, from 11.00 A.M. to 04.00 P.M. on week days & from 11.00 A.M. to 01.00 P.M. on Saturday within the specified period of submission of the tender document for which he will be given a receipt by the Office of the Material Controller.

The bidder will submit his sample Meters in sealed casing / cartoon along with relevant Meter documents (**As per Annexure-IV)**, on any working day, from 11.00 A.M. to 04.00 P.M. on weeks days & from 11.00 A.M. to 01.00 P.M. on Saturday within the specified period of submission latest by 04.00 P.M. on the last day of submission of bid to the Office of the Chief Engineer (DTD), Abhikshan, Sec-V, Salt Lake, Kolkata-91. The bidder will be given a receipt, jointly signed by the bidder and DTD officials, mentioning the samples and papers submitted by the bidder as per check list.

(a) While submitting the samples and required documents as per Annexure-IV, the bidder has to submit two numbers of sealed meters as per the specifications stated herein before, without the welding of the meter base and cover and body screw caps.

(b) They should also submit one prototype of meter base and cover (with body screw caps) properly welded.

(c) The date of testing of sample meters will be intimated to the bidders by C.E.(DTD) and on the date of testing of sample meters of a particular bidder, he shall come prepared with the following :

BCS (as per specification)

- CMRI compatible with BCS and loaded with CMRI software and laptop compatible with BCS.
- Modem and accessories for testing the remote meter reading.
- Any other accessories required for observing the performance and capabilities of the meters.

During such testing, other bidders will also be allowed to witness the testing.

7.0 QUALITY ASSURANCE PLAN :

The design life of the meter shall be minimum 20 years and to prove the design life the firm shall have at least the following quality Assurance Plan: -

- The factory shall be completely dust proof.
- The testing rooms shall be temp. and humidity controlled as per relevant standards.
- The testing and calibrating equipments should be automatic and all test equipment shall have their valid calibration certificates.
- Meter will be tested (in case of lot test) in fully automatic test bench. No human intervention will be allowed during Testing.
- Power supplies used in testing equipment shall be distortion free with sinusoidal wave-forms and maintaining constant voltage, current and frequency as per the relevant standards.

During the manufacturing of the meters the following checks shall be carried out.

i) Meter frame dimensions tolerances shall be minimum.
ii) The assembly of parts shall be done with the help of jigs and fixtures so that human errors are eliminated.
iii) The meters shall be batch tested on automatic, computerized test bench and the results shall be printed directly without any human errors.

The Bidder shall invariably furnish the following information along with his bid, failing which his bid shall be liable for rejection. Information shall be separately given for individual type of material offered.

- Statement giving list of important raw materials, names of sub-suppliers for the raw materials, list of standards according to which the raw materials are tested, list of tests normally carried out on raw materials.

- Information and copies of test certificates in respect of bought out accessories.

- List of manufacturing facilities available.

- Level of automation achieved and lists of areas where manual processing exists.

- List of areas in manufacturing process, where stage inspections are normally carried out of quality control and details of such tests and inspections.

- List of testing equipment available with the bidder for final testing of equipment specified and test-plant limitations, if any, vis-à-vis type, special acceptance and routine tests specified in the relevant standards and this specification. These limitations shall be very clearly brought out in schedule of deviations.

The laboratory of manufacturer must be well equipped for testing of the meters. They must have computerized standard power source and standard equipment calibrated not later than a year (or as per standard practice). The details of testing facilities available for conducting

1) The routine tests
2) Acceptance tests shall be furnished with the bid.

8.0 MANUFACTURING ACTIVITIES:

All the materials, electronics and power components, ICs used in the manufacture of the meter shall be of highest quality and reputed make to ensure higher reliability, longer life and sustained accuracy.

The manufacturer should use Application Specific Integrated Circuit (ASIC) or Micro controller for metering functions.

The electronic components shall be mounted on the printed circuit board using latest Surface Mounted Technology (SMT) except power components by deploying automatic SMT pick and place machine and re flow solder process. The electronic components used in the meter shall be of high quality **and there shall be no drift in the accuracy of the meter at least up to 10 years.**
Further, the Bidder should own or have assured access (through hire, lease or sub-contract) of the mentioned facilities. The PCB material should be of glass epoxy FR-4 grade conforming to relevant standards.

All insulating materials used in the construction of meters shall be non-hygroscopic, non-aging and tested quality. All parts that likely to develop corrosion shall be effectively protected against corrosion by providing suitable protective coating.

Quality should be ensured at the following stages:

At PCB manufacturing stage, each board shall be subjected to bare board testing. At insertion stage, all components should undergo testing for conforming to design parameters and orientation. Complete assembled and soldered PCB should undergo functional testing using test equipments (testing jig).

Prior to final testing and calibration, all meters shall be subjected to accelerated ageing test to eliminate infant mortality, i.e., meters are to be kept in ovens for 72 hours at 55°C temperature & atmospheric humid condition. After 72 hours meters should work correctly. Facilities / arrangement for conducting ageing test should be available with the manufacturer.

The calibration of meters shall be done in-house.

The bidder should submit the list of components used in the meter along with the offer.

A detailed list of bought-out items, which are used in the manufacture of the meter, should be furnished indicating the name of firms from whom these items are procured. The bidder shall also give the details of quality assurance procedures followed by him in respect of the bought-out items.

The details of testing facilities available for conducting the routine and acceptance tests and other special tests on the meter shall be furnished with the bid. The facility available if any for conducting type test may also be furnished.

9.0 DOCUMENTATION :

Seventy-five sets of operating manuals shall be supplied to the office of the CE (DTD) for distribution at sites.

One set of routine test certificates shall accompany each dispatch consignment.

The acceptance test certificates in case pre-dispatch inspection or a routine test certificate in cases where inspection is waived has to be approved by the purchaser.

10.0 GUARANTEE:

The meters of manufacturers shall be guaranteed against any manufacturing defect or bad workmanship or component failure for a period of **5 ½ years** from the date of supply.

The meter found defective within the above guarantee period shall be replaced by the supplier free of cost within one month of the receipt of intimation of failure / defect.

11.0 REPLACEMENT OF DEFECTIVE METERS :

The meters declared defective by the WBSEDCL shall be replaced by the supplier up to the full satisfaction of the WBSEDCL at the cost of supplier. Failure to do so within the time limit prescribe shall lead to **imposition of penalty of twice the cost of meter**. The same may lead to black listing even, as decided by WBSEDCL. In this connection the decision of WBSEDCL shall be final.

12.0 PACKING & FORWARDING :

The equipment shall be packed in cartons / crates suitable for vertical / horizontal transport as the case may be, and suitable to withstand handling during transport and outdoor storage during transit. The supplier shall be responsible for any damage to the equipment during transit, due to improper and inadequate packing. The easily damageable material shall be carefully packed and marked with the appropriate caution symbol. Wherever necessary, proper arrangement for lifting, such as lifting hooks etc. shall be provided. Supplier without any extra cost shall supply any material found short inside the packing cases immediately.

The packing shall be done as per the standard practice as mentioned in IS 15707: 2006. Each package shall clearly indicate the marking details (for e.g., manufacturer's name, Sl. Nos. of meters in the package, quantity of meter, and other details as per supply order). However, he should ensure the packing is such that, the material should not get damaged during transit by Rail / Road.

13.0 GENERAL :

Principle of operation of the meter, outlining the methods and stages of computation of various parameters starting from input voltage and current signals including the sampling rate, if applicable shall be furnished by the bidder.

The Components used for manufacture of meter should be of high quality and the bidders should confirm component specification as specified below in Annexure-III

Bidders should compulsorily fill Annexure-I, Annexure-II & Annexure-III for technical qualification.

Component Specifications:

The meters shall be designed and manufactured using SMT (Surface Mount Technology) components, except for power supply components, LED / LCD etc., which are PTH type.
All the material and electronic power components used in the manufacture of the meter shall be of highest quality and reputed makes so as to ensure higher reliability, longer life and sustained accuracy.

Sl. No.	Component Function / Feature	Requirement	Make / origin
1.	Current Element	E-beam /spot welded C.T. shall be provided in the phase element and in the neutral with proper isolation.	Any make or origin conforming to IS-2705
2.	Measurement /computing chips	The Measurement / computing chips used in the meter should be with the Surface mount type along with the ASICs.	Analog Devices, AMS, Cyrus Logic, Atmel, NEC,,Taridian,SAMES Texas Instruments, Phillips,Maxim,Toshiba, Renasas Siemens, National Semiconductor,
3.	Memory chips	The memory computing chips should not be affected by the external parameters like sparking, high voltage spikes or electrostatic discharges.	National Semiconductors, Atmel, Microchip, Texas Instruments, Phillips Hitachi, Teridian, Toshiba, Renasas,
4.	Display modules	The display modules should be well protected from the external UV radiations. The display should be clearly visible over an angle of at least a cone of 70°.The construction of the modules should be such that the displayed quantity should not disturbed with the life of display. The display should be TN type industrial grade with extended temperature range.	Hailing, Holtek, Bonafied Technologies, Advantek, Truly Semiconductor, Hitachi, Sony, Tianma, Fair Child.
5.	Communicati on modules	Communication modules should be compatible for the RS 232 ports	National Semiconductors, Hitachi, Texas Instrument, Philips, Hp, Agilen, Everlight.
6.	Optical port	Optical port should be used to transfer the meter data to meter reading instrument. The mechanical construction of the port should be such to facilitate the data transfer easily.	National Semiconductors, Hitachi, Texas Instruments, Siemens, Agilent, Philips, Hp, Everlight..
7.	Power Supply	The power supply should be with the capabilities as per the relevant standards. The power supply unit of the meter should not be affected in case the maximum voltage of the system appears to the terminals due to faults or due to wrong connections.	As specified.

8.	Electronic components	The active & passive components should be of the surface mount type & are to be handled & soldered by the state of art assembly processes.	Philips, Toshiba, Fairchild, Murata, Rohm, Siemens. National Semiconductors, ATMEL, Texas Instruments, Hitachi. Ligitec, OKI, TDK, EPCOS, Epson, Panasonic.
9.	Mechanical parts	The internal electrical components should be of electrolytic copper & should be protected from corrosion, rust etc. The other mechanical components should be protected from rust, corrosion etc. by suitable plating / painting methods.	
10.	Battery	Lithium-ion with guaranteed life of 10 years	Renata, Panasonic, Varta, Tedrium, Sanyo, National, Tadiran, Duracell, Tekcell
11.	RTC / Micro controller	The accuracy of RTC shall be as per relevant IEC / IS standards	Philips, Dallas, Atmel, Motorola, NEC, Renesas, Hitachi, Texas Instruments, Xicor, NEC, OKI, EPSON
12	Pilfer Proof Meter Box	Technical specification given in separate sheet	Thermosetting Plastic

Annexure - I

GUARANTEED TECHNICAL PARTICULARS OF AC THREE PHASE FOUR WIRE, L.T. STATIC WHOLE CURRENT (1) 5-30 Amps (2) 20-100 Amps, ENERGY METER WITH LCD DISPLAY

Sl. No.	Particulars	Min. Requirement	As offered
1.	Name of manufacturer		
2.	Type, name & number		
3.	Standard Applicable	IS:13779/1999, IS: 12346 / 1988, IS: 14434 / 1998, CEA regulation no. 502 / 70 / CEA / DT&D dt.17.03.06 and CBIP technical report no.88 with its latest amendment as on date..	
4.	Type of Meter (Model No.)		
5.	Rating		
(i)	Accuracy Class	Class-I	
(ii)	Rated Voltage	240V Ph to Neutral (+ 20% to - 30%)	
(iii)	Rated current	Ib-5 &20 Amps. Imax-30 & 100 Amp	
(iv)	Rated frequency	50 Hz ± 5%	
(v)	Power factor	0 lag to Unity to 0 lead	
(vi)	Minimum saturation current	Bidders to specify	
(vii)	Meter Constant (imp / KWH)	-do-	
6. (i)	Maximum. Continuous current rating (Amp.)	30 & 100 Amps.	
(ii)	Continuous current rating of terminals for two hours	45 & 120 Amps	
(ii)	Running with no load &(-)70% to 120 % voltage	No creeping	
7.	Short time over current for 10 milli seconds	30 Imax for one half cycle at rated frequency	
8.	Starting current at which meter shall run & continue to run	0.2% of Ib at rated voltage and unity power factor	
9.	Power loss at rated frequency & reference temperature		
(a)	Current circuit at rated current	Less than 4 VA (Including all phases	
(b)	Voltage circuit at rated current	Less than 1.5W / 10VA (do)	
10.	Type of material used		
(a)	Base		
	Material	High Impact strength, non-hygroscopic, fire retardant, fire resistant, UV stabilised poly carbonate (Lexan 503R or equivalent)	
(b)	Meter cover	High Impact strength, non-hygroscopic, fire retardant, fire resistant, UV stabilised Transparent poly carbonate (Lexan 943A or equivalent)	
(c)	Terminal Block		
(d)	Terminal cover		
	Material	High Impact strength, non-hygroscopic, fire retardant, fire resistant, glass reinforced poly carbonate (Transparent)& non detachable with hinging arrangement (Lexan 943A or equivalent).	

Sl. No.	Particulars	Min. Requirement	As offered
(f)	Screw		
	(i) Material	Tin / Nickle Plated - Brass	
	(ii) Size	Bidders to specify	
11.	Internal diameter of Terminal Hole	Min. 9.5 mm	
12.	Centre to Centre clearances between adjacent terminals	13 mm	
13	Transducers		
(i)	Input	C.T provided in phase element and in the neutral. Voltage: Potential divider (PT less)	
(ii)	Output	LCD	
(iii)	C.T. – no of turns	Bidders to specify	
14.	Type of Register	LCD suitable for operation up to $80^{o}C$	
(i)	No. of Digits	7 (integer only)	
(ii)	Size of Numerals	10.0 X 5 mm (minimum)	
15.	Display		
(i)	On Scroll Mode & Auto display mode	Both required	
(ii)	Type of push button	Spring loaded push button to be provided on top cover of meter to read parameters	
16.	Reading on power off condition	Meter shall be able to display reading during power outage through the push button provided on the meter with facility for hands free meter reading with auto-off provisions.	
17.	Battery of Real time clock	(i) It shall be Lithium-ion battery having at least 10 years of life	
		(ii) The drift in time shall not exceed +/- 3 minutes per year	
18.	Fixing/sealing arrangement		
	(i) Fixing of meter	3 fixing holes (one at top & two at bottom under terminal block). The top fixing screw shall not be accessible after meter is fixed to Pilfer Proof Meter Box base.	
	(ii) Sealing of meter cover to Base	At least two fixing screws for fixing meter cover with the meter base shall be provided. Each screw should have two holes one for fitting /fixing of manufacturer's seal and the other for the utility seal. The arrangement should be in such a manner that any access to the working part of the meter body will not be possible without breaking / tampering / removing the said seals. Suitable arrangement should be made for fitting/fixing of utility seal at two sides of meter terminal cover in such a manner that any access to the terminal cannot be possible without removing the seals. There should also be provision for	

Sl. No.	Particulars	Min. Requirement	As offered
		sealing at the optical port. The meter cover shall be permanently fixed to the base by ultrasonic welding or any other technology which is equally or more efficacious so that cover cannot be opened without breaking, i.e. the meter should be break to open type. **Meter should have an indication in its display if top cover is removed.**	
19.	Type of hinged undetectable terminal cover	Terminal cover shall be hinged.	
20.	Performance of meter in tamper conditions		
	(i) Input and out put Terminals interchanged	Should work within specified accuracy	
	(ii) Change of phase sequence	----do----	
	(iii)Phase current reverse	-do-	
	(iv) Indication of above tamper condition	LCD / LED indication.	
21.	Suitability of meter to sustain over voltage i.e. phase to phase voltage injected between phased & neutral	Should sustain	
22	Electromagnetic compatibility (EMI / EMC severity level)	As per IS 13779: 1999	
23.	(i) Effect on accuracy of external electromagnetic interference of electrical discharge, external magnetic field	Should work within accuracy as per latest ISS & CBIP report -88 with latest amendment.	
	(ii) Current reversal, Neutral disturbance & Magnetic tamper logging in memory	Meter shall log last 150 events with date and time	
24.	Effect on accuracy under tamper conditions / influence conditions	Should work within accuracy specified in IS: 13779 / 1999, and CBIP tech. Report 88. Error beyond +/- 4 % will not be acceptable for conditions not specified in IS: 13779 / 1999 & CBIP tech. Report 88.	
25.	Drift in accuracy of measurement with time	No Drift in accuracy in measurement with time	
26.	Name plate details	It should cover all the details as prescribed in Clause-10 of tech. spec.	
27.	Approximate weight of meter	To be indicated	
28.	Type of mounting	Projection type	
29.	Calibration	Meter shall be software calibrated at factory & there shall not be any mechanical form of calibration, such as, mechanical preset / trim port / potentiometer etc. so that any adjustment in calibration is not possible after freezing the meter constant.	

Sl. No.	Particulars	Min. Requirement	As offered
30.	Manufacturing activity		
	(i) Mounting of components on PCB shall be SMT type	SMT type and ASIC technology	
	(ii) Compliance to assurance	To be complied	
31.	Testing facility		
(i)	Fully automatic computerised meter test bench with print out facility shall be available	Must be available	
(ii)	Make and Sl. No. of Test bench	To be indicated	
(iii)	Accuracy of ESS duly calibrated	---do---	
(v)	Following in house testing facility shall be available;		
	(i) AC high voltage test	Must be available	
	(ii) Insulation test	--do--	
	(iii) Test of no load condition	--do--	
	(iv) Test of Starting condition	--do--	
	(v) Test on Limits of error	--do--	
	(vi) Power loss in voltage and current circuit	--do--	
	(vii) Test of Repeatability of error	--do--	
	(viii) Test of meter constant	--do--	
	(xi) Power loss in voltage & current circuit	--do--	
	(x) Test of Magnetic influence	--do--	
32.	Whether offered meter type tested as per ISS 13779 / 1999 Table-20 for all the following tests (indicate name of laboratory / Reference of report No. & date.)	Clause No – 3 of general requirement.	Name of Lab. Type test Report Ref. No.
(i)	Vibration test	12.3.2	
(ii)	Shock test	12.3.1	
(iii)	Spring Hammer test	12.3.3	
(iv)	Protection against penetration of dust and water	12.5	
(v)	Test of resistance to heat & fire	12.4	
(vi)	Power consumption	12.7.1	
(vii)	Influence of supply voltage	12.7.2	
(viii)	Voltage dips and interruptions	12.7.2.1.	
(ix)	Short time over current	12.7.3	
(x)	Influence of self heating	12.7.4	
(xi)	Influence of heating	12.7.5	
(xii)	Impulse voltage test	12.7.6.2	
(xiii)	AC high voltage test	12.7.6.3	
(xiv)	Insulation test	12.7.6.4.	
(xv)	Radio Interference measurements	12.9.5	
(xvi)	Fast transient burst test	12.9.4	
(xvii)	Electrostatic discharge	12.9.2	
(xviii)	Immunity to electro-magnetic H.F. field	12.9.3.	
(xix)	Test for meter constant	12.15	

Sl. No.	Particulars	Min. Requirement	As offered
(xx)	Test of starting conditions	12.14	
(xxi)	Test of no load condition	12.13	
(xxii)	Ambient temp. influence	12.12	
(xxiii)	Test of influence quantities	12.11	
(xxiv)	Interpretation of test results	12.16	
(xxv)	Repeatability error test	12.17	
(xxvi)	Dry heat test	12.6.1	
(xxvii)	Cold test	12.6.2	
(xxviii)	Damp heat cycle test	12.6.3	
(xxix)	Test of influence of immunity to Earth fault	12.8	
(xxx)	Limits of error	11.1	
33.	Guarantee period of meter	5-1/2 years from the date of supply. Guarantee period shall be printed on the nameplate.	
34.	BIS licence		
34.1	BIS licence No. & dt. with its validity for ISI certification mark on offered meter.	To be mentioned	
34.2	Details of meter design for which above BIS certification has been obtained: -	To be mentioned	
(i)	Ratio of Ib to Imax		
(ii)	Material of meter body		
(iii)	Type of energy registering counter		
(iv)	Type of technology (Digital/Analog)		
(v)	Grade of printed circuit Board material		
(vi)`	Type of assembly of component used (SMT)		
(vii)	Meter constant (IMP / KWh)		
(viii)	Auxiliary power circuit (with PT or PT less)		
(ix)	Current circuit (CT / Shunt combination or only shunt)		
(x)	Accuracy class		
35.	ISO accreditation no. & dt. with its validity		
36.	Other parameters / features not covered in the above GTP	Conform to specification of IS-13779 / 1999 & CBIP technical report No.88 (with its latest amendment).	
37	Past Experience	Copies of order executed in last two years along with GTP of the supplied meters to be enclosed	

Annexure - II

Pre-Qualification Conditions for Three Phase Static Meters

Sl. No.	Particulars	Remarks
1	Bidders must have valid BIS certification for the offered meter.	Yes / No
2	Bidder preferably posses ISO 9001 certification	Yes / No
3	Bidder should be manufacturers of static meters having supplied Static 1-ph or 3-phase meters with memory and LCD display to Electricity Boards / Utilities in the past 2 years	Yes / No
4	Bidder has Type Test certificate for the Type of offered meter not more than 3 (three) years old	Yes / No
5	Bidders should have dust free, static protected environment for manufacture, assembly and Testing.	Yes / No
6	Bidder should have automatic computerized test bench for lot testing of meters.	Yes / No
7	Bidder has facilities of Oven for ageing test.	Yes / No
8	Bidder shall submit certificate for immunity against magnetic influence of 0.2 T AC. & 0.5 T DC. from a NABL accredited Laboratory, for the same type of meter as offered.	Yes / No

Annexure - III

Sl. No.	Component Function / Feature	As per Requirement	Make / origin
1	Current Element		
2	Measurement / Computing chips		
3	Memory chips		
4	Display modules		
5	Communication modules		
6	Optical port		
7	Power Supply		
8	Electronic components		
9	Mechanical parts		
10	Battery		
11	RTC / Micro controller		

ANNEXURE - IV

Sl. No.	*LIST OF DOCUMENTS TO BE SUBMITTED DURING SAMPLE SUBMISSION*			
1	*Attested copy of type test reports from NABL accredited laboratory*			
2	*Attested copy of BIS certificates of the same type of meter submitted as sample*			
3	*Attested certificates as regards material used for meter case, cover & terminal block.*			
4	*Annexure – II as per tender documents*			
5	*Annexure – III as per tender documents*			
6	*Operating manual of the meter submitted*			

WBSEDCL

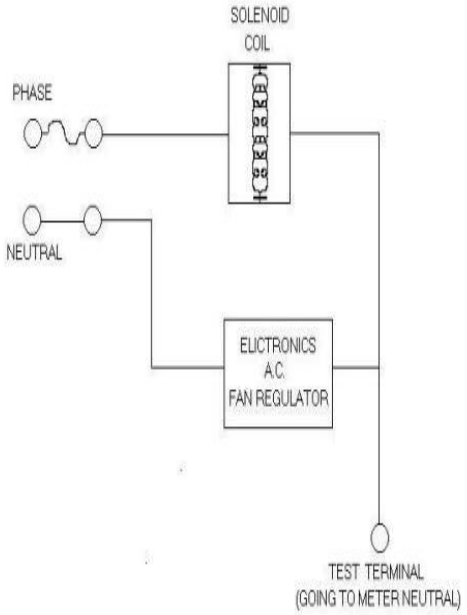

CIRCUIT DIAGRAM FOR TEST JIG TO INTRODUCE CHOPPED A.C. IN NEUTRAL

WBSEDCL

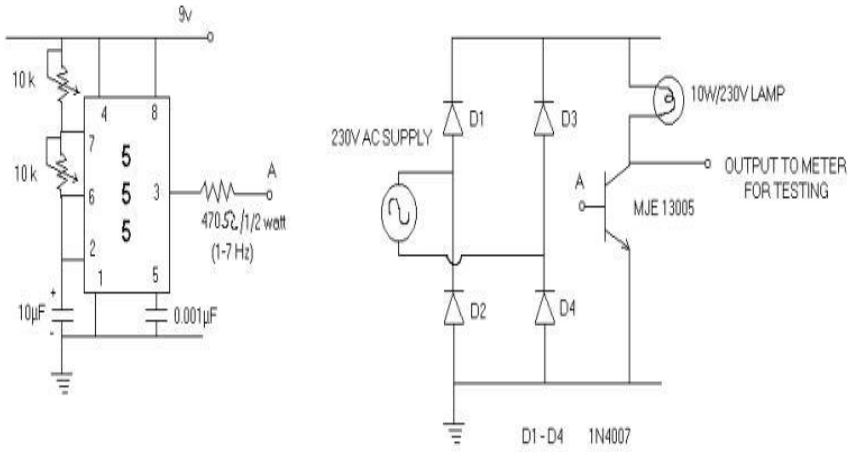

CIRCUIT DIAGRAM FOR TEST FIGURE TO INTRODUCE PULSATING D.C. IN NUTRAL

TECHNICAL SPECIFICATION FOR PILFER PROOF METER BOX (SINGLE DOOR TYPE & WITHOUT CUT OUT) SUITABLE FOR 3 PHASE WHOLE CURRENT STATIC ENERGY METER

SCOPE :

1. This specification covers the manufacture and supply of Pilfer Proof Moulded Meter Box suitable to house 3-Phase Static Energy Meters. The Meter Box shall be suitable for wall mounted type.

2. Technical requirement and standard :- The meter box shall be made out of hot pressed moulded, unbreakable, high grade, fire retardant thermosetting plastic e.g. glass fiber reinforced polyester SMC (Sheet Moulding Compound) as per S1 grade of IS) 13410, or Glass Reinforced Polyester Dough Moulding Compounds as per Grade D1 of IS 13411, with flame retardant properties having good di-electric & mechanical strength. The Top cover of the Meter Box shall be as per enclosed drawing with provision of separate window arrangement as shown. The material must be U.V. stabilized to ensure that the Meter Box should not change in colour, shape, size, dimension when subjected to 200 hrs. of U.V. Ageing Test. The Meter Box should have top tapered surface / round corners to prevent stay of rain water at the top of the Meter Box.

The Meter Box shall be capable of withstanding the mechanical, electrical and thermal stress as well as the effects of humidity which are likely to be encountered in service. At the same time the same should ensure the desired degree of safety. The plastic material used should be adequately stabilized against detrimental effect of light and weather. The surface appearance of the moulded parts must be smooth, non-porous and homogeneous, free of ripples, defects and marks. No fillers of fibers should be visible at any place. The Box shall comply in all respect with the requirement of latest Amendments of I.S. 13410-1992 Specification for “General, requirements for enclosures for accessories for fixing electric installations.” Applicable degree of protection shall be I.P. 42 or better. The SMC material which will be used by bidder for this moulded Meter Box conforms to Relevant IS/13410-1992 with latest amendment.

The Enclosures shall generally comply with the provision of IS 14772 or IEC 695. The enclosures shall be suitable for outdoor application. The enclosure shall be with good workmanship

Soft neoprene/nitrile rubber gaskets shall be provided all round wherever required for protection against entry of dust and water. The gasket shall confirm to Type-III as per IS-11149. The enclosure shall comply with IP-54 degree of protection.

The Enclosures shall be off- white/admiral grey/Ivory or as specified by the owner.

3. General constructional requirement :

Dimension :

Length - 400 mm, Breadth - 300 mm, Height - 200 mm.
Thickness of the enclosure shall not be less than 2 mm on all sides including door. The enclosure shall have 4 mm thickness of the tongue and groove area.

There should be a minimum 30mm clearance on all sides from the meter surface (projected) except the bottom side which should be minimum 75 mm from the lower edge of terminal block.
Meter mountings inside the meter box will be such that the meter base support inside box should be preferably raised by about 10 +/- 2 mm for each items for each of working. Fixing arrangement of meters and other equipment to the base of the meter box should be as per the specification.

Earthing Bolt :

One (1) no. Earthing Bolts of dimension M8 x 20mm are to be provided.

Viewing Window :

A viewing window (175 x 85 mm or as per requirement of the owner) made up of scratch and break resistant, UV resistant, transparent Polycarbonate / toughened glass shall be provided on the door for reading the meter without inconvenience. The minimum thickness of the viewing window shall be 4.0 mm. The window shall be securely fixed with meter enclosure from inside Suitable neoprene gasket shall be provided so that there shall not be any ingress of moisture through this window into the meter box.

Hinges :

A minimum of 2 nos. brass/stainless steel hinges on each door shall be provided inside the enclosure. The hinges of the door shall be concealed and they shall be fixed to the flanges provided on the body and cover of the enclosure in such a manner that the door opens by a minimum of 120 degrees.

Locking Arrangement :

The cover should be fitted with base and should be of concealed hinges. It should have some knobs provided with covers. The covers are to be fixed on the base of Meter Box in such a way that any access from outside is not possible. There should be provision of padlock simultaneously with holes for sealing arrangement covering the top of the Meter Box. The door shall be provided with SS latch or U clamp Similar cable entry holes should be provided in the bottom of the Meter Box as per the drawing enclosed and the intermediate partition plates.

Sealing Arrangement :

The meter box shall have provision for minimum 2 nos. seals to make it fully tamper proof.

Arrangement for Inlet & Outlet Cable Entry :

Two (2) nos. circular holes having 40 mm dia shall be provided at the bottom of the Meter Box for inlet and outlet of armoured aluminium cables. High grade double compression MS cable glands fixed on both sides by check nuts are to be provided for securely fixing the cable at the bottom of meter box. A suitable arrangement like clamping nut may be provided with the gland so that opening dia can be reduced to the size of Cable.

Base and cover details :

The cover shall be made overlapping type having collars on all 4(four) sides. The cover of the Meter Box shall be provided with Gasket of sufficient size to completely fit in the grooves of the base. The gasket should be made of high quality neoprene rubber. The base of the Meter Box must have a groove to hold the Gasket and the overlap of the top cover with base must be minimum 6 mm.

Fixing arrangement of Meter Box :

For fixing the Meter Box to wall or wooden board, 4 no. holes (two top side holes to be keyholes) of minimum 4 mm dia shall be provided at the four corners of meter cup-board. The meter is to be installed in the Meter Box and the Box in assembled condition shall have provision to fix it on wall. The 4 no. self threaded screws of min. size of 4 mm dia and 25 mm long shall be provided with each Meter Box.

Marking / Embossing :

The following information shall be clearly & indelibly embossed (not printed) on the cover and base of the Meter Box. The top & bottom corner of Meter Box Sl.No. shall be same for the particular Meter Box

i) Property of WBSEDCL
ii) Name / Brand name of Manufacturer
iii) Meter Box Sl.Nos. (Embossed on both the base & covers of Meter Box)
iv) Sign of danger

Submission of Sample :

Bidder shall submit a sample Meter Box as per our specification along with the sample meter to the office of the Chief Engineer, (DTD), Abhikshan Bhavan, Sector-V, Salt Lake, Kolkata-91 before the last day of submission of bid.

Submission of sample meter box as per size available with the bidder but conforming to our specification towards its quality is acceptable . Type testing including material identification (IR Spectrometry test) of one meter box manufactured as per specification is to be conducted at any NABL accredited laboratory/CIPET by the supplier at their own cost after placement of order. For type testing the meter box will be selected from the first offered lot of meter with meter box. If the type test results are not found satisfactory, the offered lot of meter along with meter box will be rejected.

Testing :

a) Type Test : The Meter Box offered shall be type tested as per relevant I.S. standards and the Technical Specification stated below :

The bidder must furnish type test report including material verification of the offered /sample meter box from any NABL/Govt. approved laboratory as available with them along with technical bid without which the offer will not be considered. Type test report should not be more than 5 (five) years old.

b) Acceptance Test :

The acceptance test as indicated in the enclosed table (Annexure-V) shall be carried out at the time of inspection of the offered material.

c) Routine Test :

The routine tests as indicated in the enclosed table (Annexure-V) shall be carried out and routine test certificates / reports shall be submitted to the purchaser's inspection office at the time of inspection of the offered material enclosed table (Annexure-V) shall be carried out at the time of inspection of the offered material.

Guarantee :

The Pilfer Proof Meter Box should be guaranteed against any manufacturing defects arising out of faulty design or bad workmanship or component failure for a period of 5 ½ years from the date of supply.

The meter box found defective within the above guarantee period shall be replaced by the Supplier free of cost within one month of the receipt of intimation of failure/defect. Defective meter box are to be replaced by new one with new sl. nos. as allotted by C.E (DTD).

Replacement of defective Meter Box :

The Meter Box declared defective by the WBSEDCL shall be replaced by the supplier up to the full satisfaction of the WBSEDCL at the cost of supplier as per terms of GCC within 60 (sixty) days from the date of intimation by the purchaser. Failure to do so within the time limit prescribed shall lead to imposition of penalty of twice the cost of meter box. The same may lead to black listing even, as decided by WBSEDCL. In this connection the decision of WBSEDCL shall be final.

Inspection :

The inspection will be carried out as per inspection & testing clause of General Conditions of Contract (GCC).

Guaranteed Technical Particulars :

The bidder shall furnish all the necessary information as per Annexure-VI – Guaranteed Technical Particulars. If the bidder desire to furnish any other information in addition to the details as asked for, the same may be furnished.

ANNEXURE – V

LIST OF TESTS TO BE CARRIED OUT ON MOULDED SHEET MOULDED COMPOUND METER BOXES

Sl no.	Name of Indian standard/equivalent international	Clause Ref.	Test requirement	Test particulars		
				Type	Routine	Acceptance
1.	IS : 14772		Marking	T		A
2.	As per Co.'s Drwg.	Clause 9	Dimensions	T	R	A
3.	IS : 14772	Clause 9	Protection against electric shock	T	R	A
4.	IS : 14772	Clause 02	Construction	T	R	A
5.	IS : 14772	Clause 02	Resistance to ageing, to humid condition, to ingress of solid object and to harmful ingress of water	T		
6.	IS : 14772	Clause 02	Mechanical strength	T		
7.	IS : 14772		Resistance to heat	T		
8.	IS : 14772		Resistance to tracking	T		
9.	IS: 8620/1996		Test for resistance to heat & fire. Glow wire t6est at 650^0 C as per cl.4 to 10 of IEC 695-2-1.	T		
10.	IS:13411		Heat deflection temp.(Min.150^0C.)	T	R	A
11.	IS :4249		Self Extinguishing property of spirit burner test.	T	R	A
12.	IS / ASTM		Melting point-1800 C (Minimum)	T		A
13.	IS :8623/1993	(Part-1) 18.2.2.2	Verification of di-electric properties, insulation test with 500V DC Meggar.	T		
14.	CIPET/IR Spectrometry		Material identification	T		
15.	IS :13411/1992		Test for water absorption (Max. 0.35%)	T		

Note : Applicable degree of protection shall be IP 42 or better.
Legend: T=Type Test, R=Routine Test, A=Acceptance Test.

ANNEXURE –VI

GUARANTEED TECHNICAL PARTICULARS OF THREE PHASE METER BOX :

Sl. no.	Description Name and address of manufacture	Detailed requirement	Offered
1	Name and address of manufacture		
2	Material	Thermosetting Plastic	
3	Grade of Material	SMC/DMC Ref.Standard IS: 13410-1992	
4.	PROPERTIES OF MATERIAL OF CONSTRUCTION OF METER BOX		
(a)	Heat Deflection Temperature (Ref.Std.IS: 13411)	150ºC (Minimum)	
(b)	Exposure to flame (Ref.Std.IS: 4249)	Self-extinguishing	
(c)	Melting Point (Ref.Std.IS: 13360)	Should not melt above 180°C	
(d)	Tensile Strength	50 Mpa (Minimum)	
(e)	Flexural Strength	90 Mpa (Minimum)	
(f)	Modulus of Elasticity	2000 Mpa (Minimum)	
(g)	IZod impact strength notched, 230° C	8 KJ/Sq M (Minimum)	
5.	CONSTRUCTIONAL FEATURES OF THE BOX		
(a)	Minimum clear inside dimensions of Meter Box		
	i. Height	400 mm	
	ii. Width	300 mm	
	iii.Depth	200mm	
	iv. Rust and Vermin proofing	Neoprene Rubber Gasket NRG	
(b)	(a) Material of transparent cover	Toughened Glass/Transparent Polycarbonate with Rubber Gasket	
	(b) Size of opening (Min.)	175 mm x 85 mm	
	(c) Min. thickness of cover	2 mm	
	(d) Fixing method	Fixed from inside with rubber gasket	
	Earthing arrangement	1 No. Earthing Bolt of M.S.Zinc Passivated of size M8 x 25mm long with 2 nut & 2 washer each	
(c)	Sealing arrangement	Holes for wire seal (2 nos.)	
(d)	Wire entry	MS Cable glands fixed on both sides by check nuts to be provided.	
(e)	Colour of meter box	Grey/Off White	
(f)	Meter mounting Arrangement	Suitable for mounting of any make of meter (broadly as per the Drawing)	
(g)	Box Mounting Arrangement	4 Nos. Holes	
(h)	Hinges	2Nos. Concealed hinges	
(i)	Incoming & Out going Cable holes	2 Nos, holes having 40mm dia and bottom entry. High grade double compression MS Cable glands fixed on both sides by check nuts to be provided.	

ANNEXURE -VII

TESTING :

1. Sample selected from first lot should be tested at Govt. approved independent test house for compliance of performance parameters as given in GTP including material identification to be carried out by CIPET/IR Spectrometry.
2. The test report should be submitted to WBSEDCL before completion of order.
3. Inspection of each lot, sampling plans for test: 1 nos. selected randomly from lot for testing at works.

Sl. no.	Test Requirement for moulded meter box	Reference Standards
(a)	Marking	IS:14772
(b)	Dimensions & construction	IS:14772
(c)	Heat Deflection Temperature (Min. 150°C)	IS:13411
(d)	Spirit Burner Test (Self Extinguishing)	IS:4249
(e)	Melting Point (Does Not Melt up to 400 deg. C.)	IS:13360